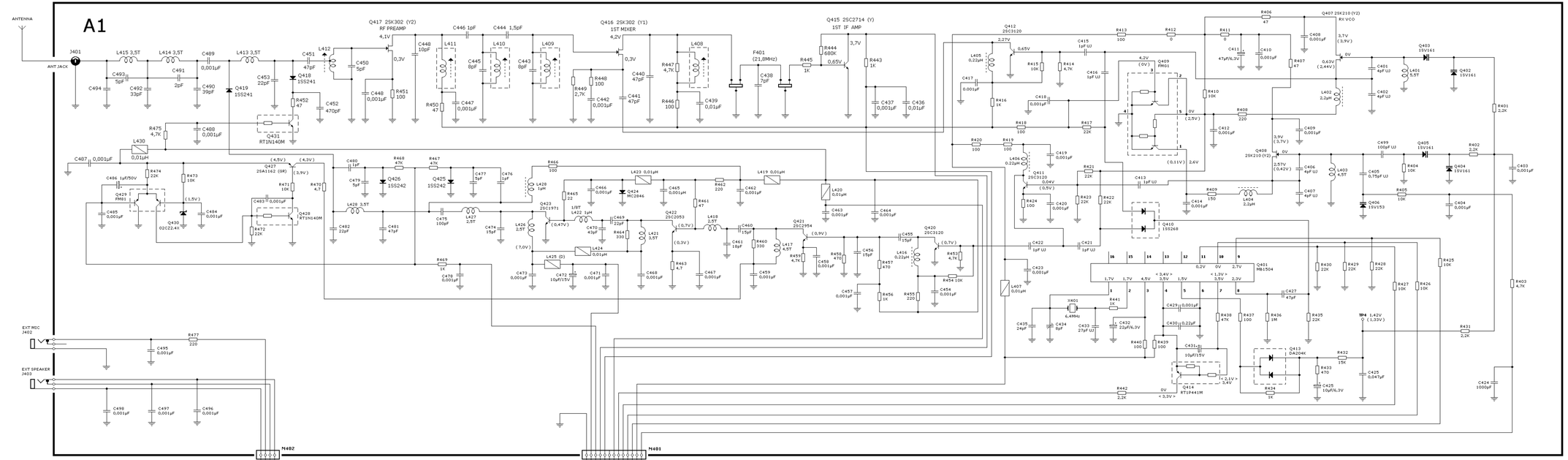

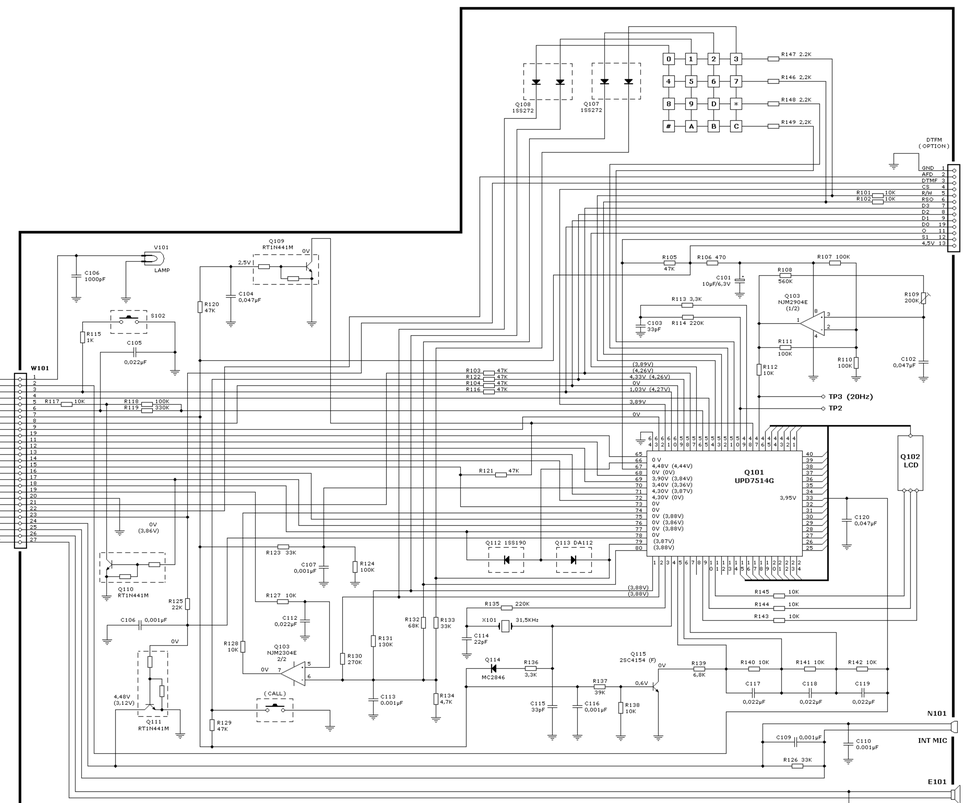

NOTES

1. UNLESS OTHERWISE NOTED. RESISTORS ARE IN OHM, CAPACITORS ARE IN FARAD AND INDUCTORS ARE IN HENRY
2. VOLTAGE NOTATIONS ARE AS FOLLOWS. IN THE PARENTHESES ARE APPROXIMATED VALUES.
   a) NO MARKING ---------- RX.
   b) < > ---------- UNLOCK.
   c) ( )) ---------- SQL ON.
   d) ( ) ---------- TX HI POWER.
3. TR145S00 CIRCUIT DIAGRAM. JAN/20/1995 --------->(DRAW JAN/08/2003 SP8CGU)

NX155A002